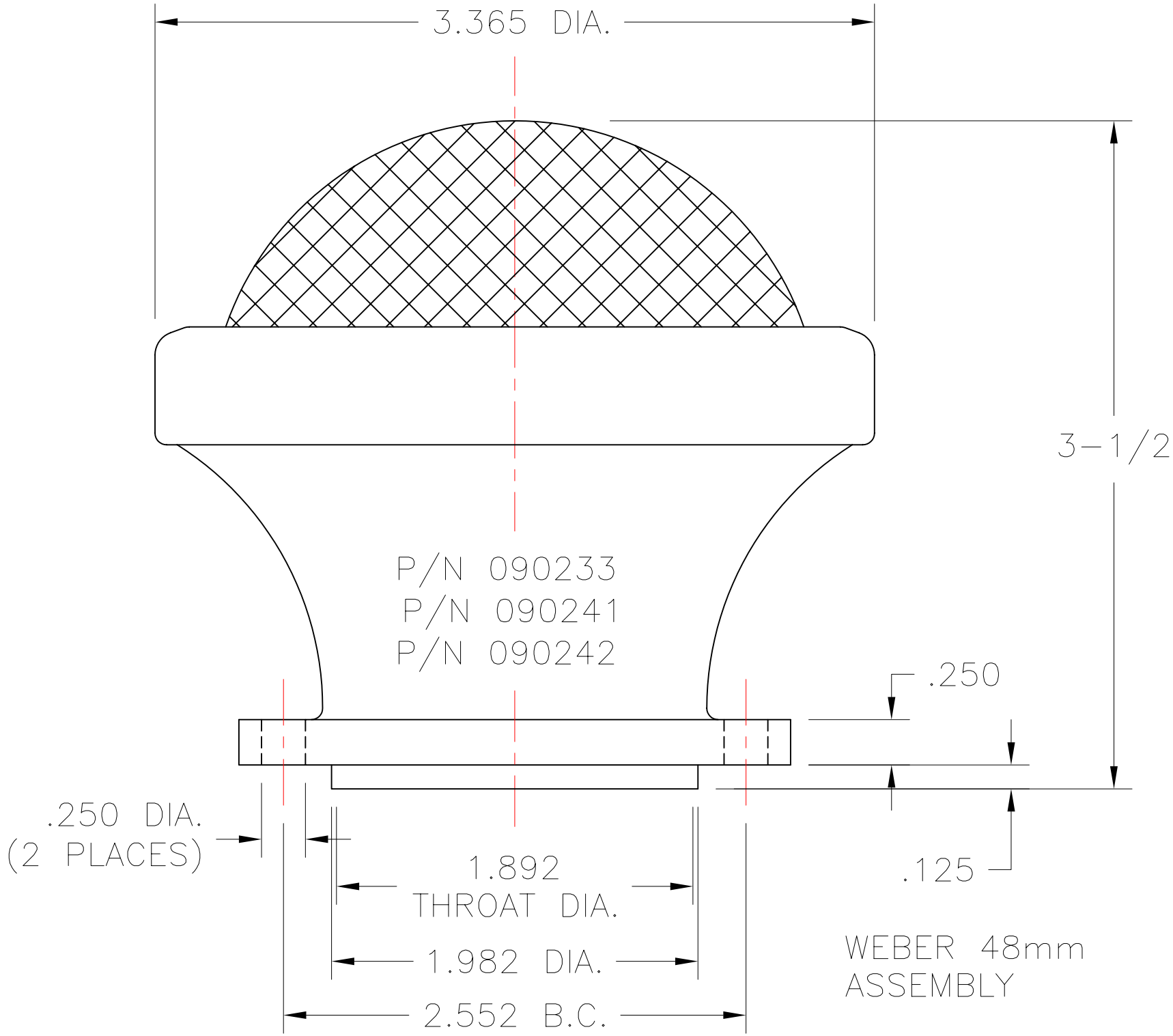
3.365 DIA.
3-1/2
P/N 090233
P/N 090241
P/N 090242
.250
.250 DIA.
(2 PLACES)
1.892
THROAT DIA.
.125
1.982 DIA.
2.552 B.C.
WEBER 48mm
ASSEMBLY